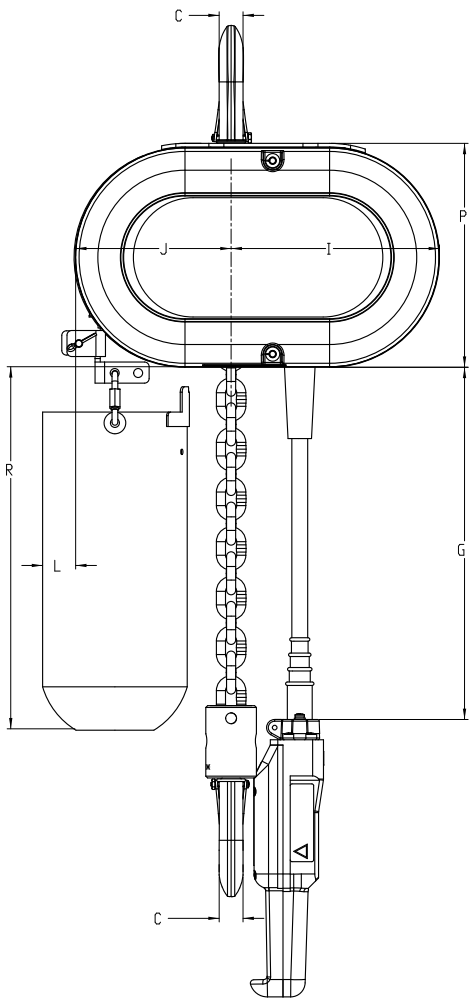

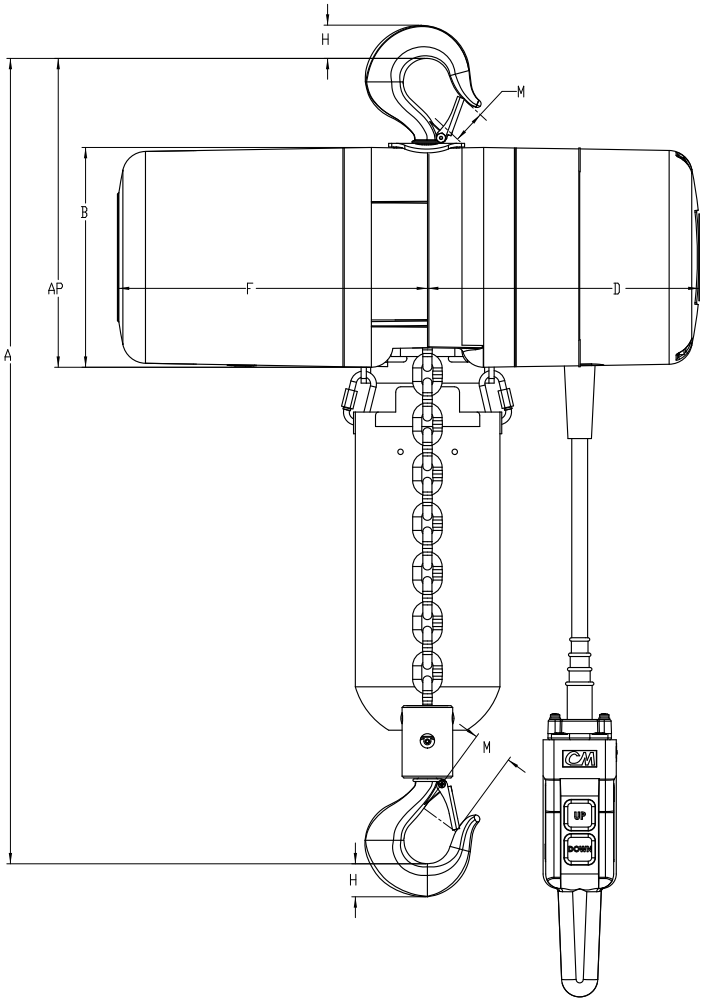

LODESTAR MODELS	
DIMENSION	J, L, JJ, AND LL
A	18 9/16
B	7 5/8
C	7/8
D	9 1/2
F	10 11/16
G	6' 3"
H	1 3/16
I	7 1/4
J	5 7/16
L	7/16
M	1 1/8
P	7 13/16
*R	12 7/8
AP	10 11/16

*BASED ON 10 FT. LIFT AND INCREASES PROPORTIONATELY WITH LONGER LIFTS.

LTR	REV	REVISION	DATE	BY

CONTROL DRAWING — All changes must be processed through the CAD system

CO-AXIAL MATERIAL HANDLING CORPORATION
DELANO, NEW YORK 12835-0397 USA

DESCRIPTION: LODESTAR V2
SINGLE REEVE
WITH HOOK SUSPENSION

SIZE: D
DWG NO: TIF-11668
REV:
SHEET 1 OF 1