FOR MORE INFO CONTACT: American Crane & Equipment Corp. - Authorized Distributor
Tel: 877-503-2972 Fax: 484-945-0430 Email: sales@americancrane.com Website: www.americancrane.com

PC#1 | NO. REQ. 1

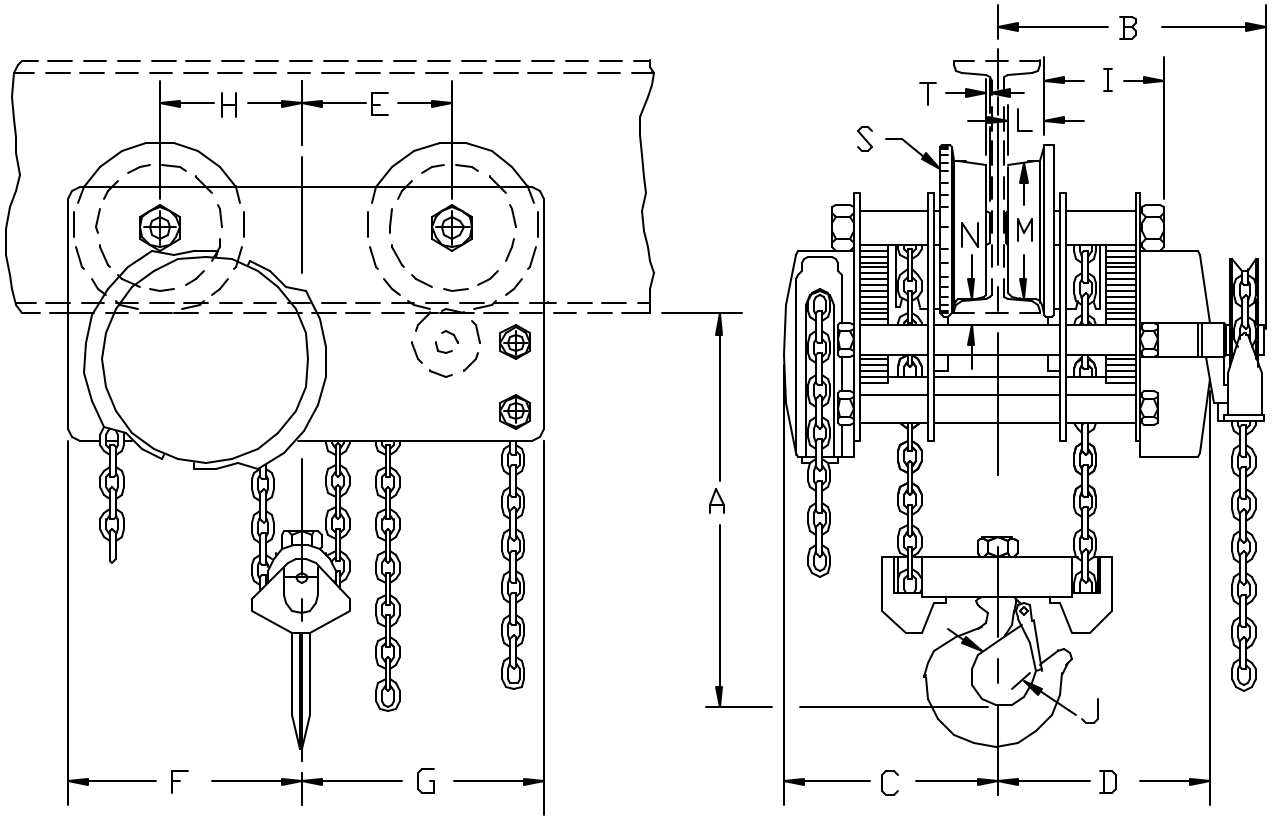

	A	8″
**	B	13 1/16″
	C	10 3/16″
	D	10 3/16″
	E	6 1/2″
	F	10 5/8″
	G	10 5/8″
	H	6 5/8″
	I	6 3/8″
	J	1 11/16″
	L	1 11/32″
	M	6 3/8″
#*	N	15/16″
	S	8″
^	T	1/4″

* TO WHEEL RUNNING SURFACE OF BEAM
** "B" APPLIES TO GEARED UNITS ONLY - FOR PLAIN UNITS DIM. "C" & "D" ARE MAX. 1/2 WIDTH
# TO UNDER BEAM ROLLER - (CLOSEST POINT OF CONTACT)
^ FROM THE FACE OF WHEEL TO END OF AXLE
CUSTOMER MUST TAKE INTO CONSIDERATION FLANGE WIDTH AND THICKNESS OF BEAM
DIM. SHOWN ARE CORRECT FOR ANY "S" OR "W" BEAM, (FLAT TREAD WHEELS, NOT SHOWN, ARE SUPPLIED FOR "W" BEAM APPLICATIONS)

MK.	REVISIONS	CK-DATE

4 TON LOW HEADROOM HOIST

CHESTER HOIST
LISBON, OHIO

DR. RLB	TR.	CK.	AP.
SCALE NONE		DATE 10/15/02	
REF. DWG. NO. ZLG31 UPDATED			
Dwg. No. CD093			